LFK6/..

- **with loose/fixed flange**
- **covering separation**

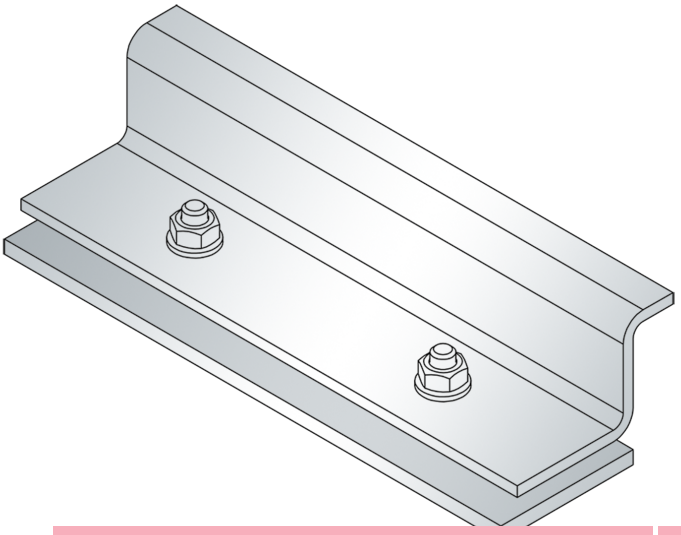

FEATURES
high edge protection, professional coating separation

APPLICATIONS
parking decks, parking garages, underground garages, ramp crossings, pedestrian bridges, all industrial applications, shopping centres, railway stations, airports

MATERIAL
hot-dip galvanised steel, stainless steel V2A (V4A on request)

COVERING TYPES
asphalt, concrete, screed

FORMED PARTS
end piece, corner piece, T-piece, cross piece

NOTES
Threaded bolt M12x35 mm with washer and nut, e=150 mm
Specification of profile height (h) from the lower edge of the loose flange.
Solid flange joints should be fully welded through and ground flat on the sealing side.

TECHNICAL DATA

Material thickness fixed flange:	8 mm
Material thickness loose flange:	6 mm
Supply length:	3 mtr

DESIGNS

ARTICLE NO.	HEIGHT (h)	RECESS (BxT)
LFK6/50	50 mm	120 x 20 mm
LFK6/60	60 mm	120 x 20 mm
LFK6/80	80 mm	120 x 20 mm

Special heights on request.

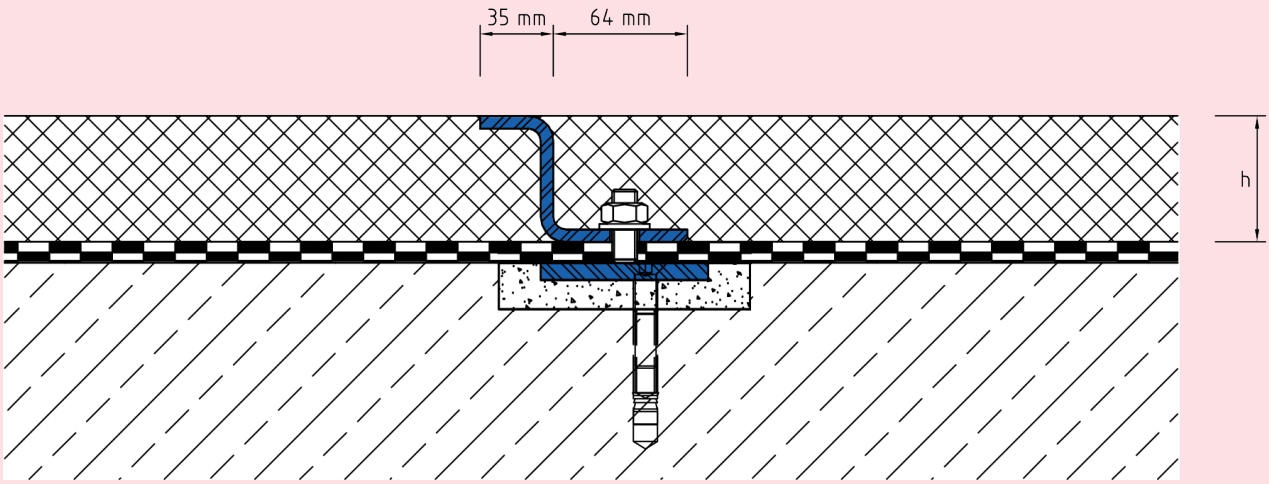

LFK6

Subject to technical change without notice.