ALR.7.150/..

- **high load-bearing capacity**
- **with adhering flange**

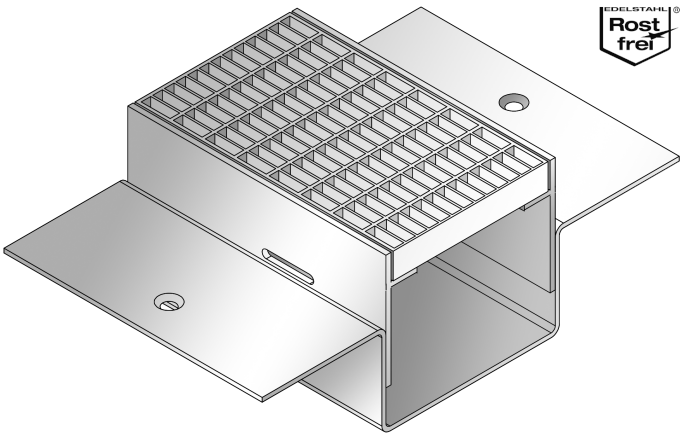

FEATURES
resistant to heavy loads, permanently tight, corrosion-resistant, high flexibility (variable lengths, heights and widths), mesh size grating in 30x10 mm (30x30 mm on request)

APPLICATIONS
parking decks, parking garages, underground garages, all industrial applications, shopping centres, railway stations, airports, exhibition halls

MATERIAL
hot-dip galvanised steel, stainless steel V2A (V4A on request)

COVERING TYPES
asphalt, screed

TRAFFICABILITY
passenger cars (trucks on request)

FORMED PARTS
channel end piece (flange all around or upstand), corner piece, T-piece, cross piece, channel drain, 2-fold locking per grating

NOTES
The individual channel elements are tightly welded together during installation on site.
Recess channel body from top fixed flange min. 75 mm to max. 90 mm available.
Drainage slots are possible (on request).
For stainless steel, the general cleaning and care instructions must be observed (see also download area).
Installation by our own fitters recommended.

TECHNICAL DATA

Material thickness adhering flange:	4 mm
Material thickness vertical base:	5 mm
Supply length:	3 mtr
Steel grating width:	150 mm

DESIGNS

ARTICLE NO.	CHANNEL HEIGHT (h)
ALR.7.150/51	51 mm
ALR.7.150/66	66 mm

Special heights on request.

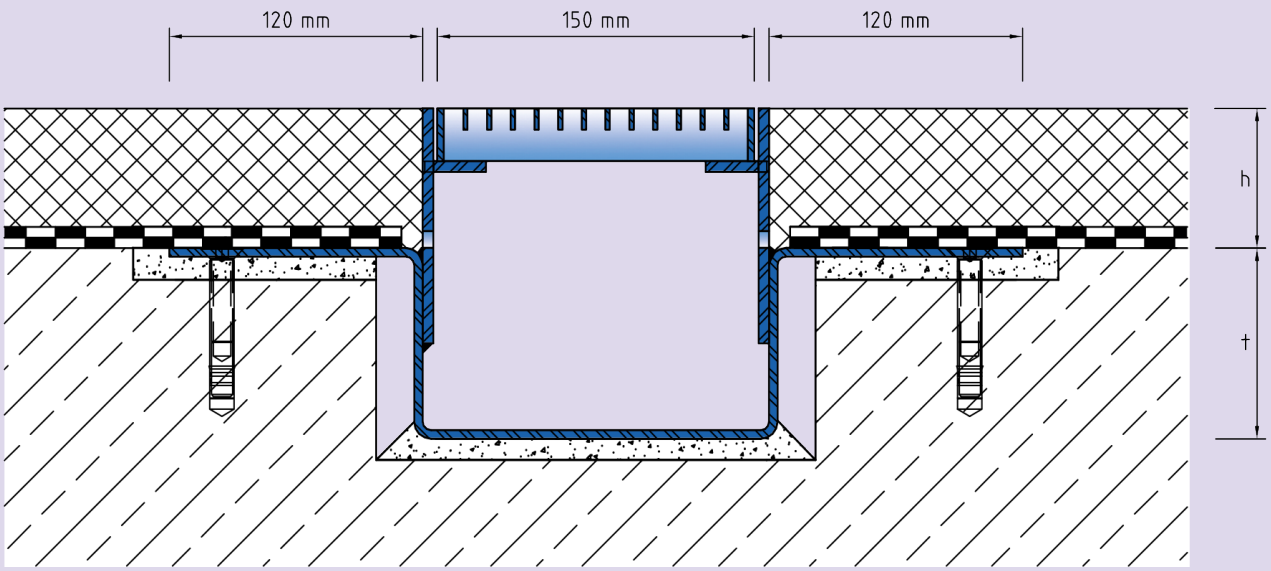

ALR.7.150

Subject to technical change without notice.