ALK.4.250/..

- **low installation height**
- **with coating-flange**

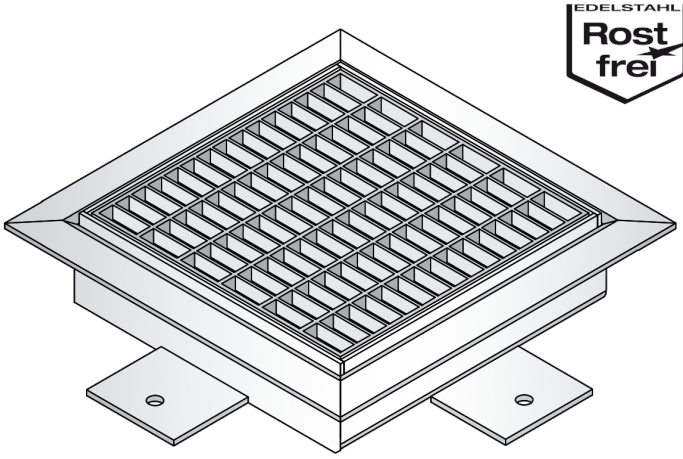

FEATURES
permanently tight, corrosion-resistant, high flexibility (variable heights and widths), mesh size grating in 30x10 mm (30x30 mm on request), grid lock inclusive, drain pipe DN100, length 200 mm

APPLICATIONS
parking decks, parking garages, underground garages, all industrial applications, shopping centres, railway stations, airports, exhibition halls

MATERIAL
stainless steel V2A (V4A on request)

COVERING TYPES
coating, screed, industrial coverings

TRAFFICABILITY
passenger cars

NOTES
For stainless steel, the general cleaning and care instructions must be observed (see also download area).
Installation by our own fitters recommended.

TECHNICAL DATA

Material/sheet thickness:	3 mm
Steel grating width:	250 mm

DESIGNS

ARTICLE NO.	CHANNEL HEIGHT (h)	RECESS (BxT)
ALK.4.250/60	60 mm	430 x 70 mm
ALK.4.250/80	80 mm	430 x 90 mm

Special heights on request.

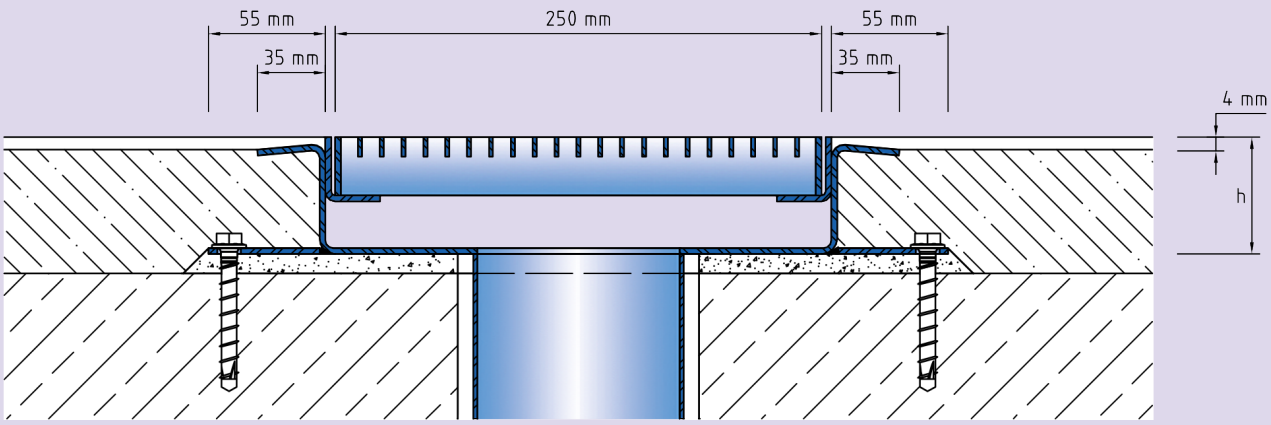

ALK.4.250

Subject to technical change without notice.